MODEL NO. JJ-320TSTA-P-1G(Passive PFC)

This specification describes the requirements of 320W switching power Supply, with a PS∏ form-factor and AT 12V,dual line input capability and forced air cooling characteristics.

1. AC INPUT

1.1 AC input requirements

The input voltage, current, and frequency requirements for continuous operation are stated below.

Table 1 AC Input Line Requirements

Parameter	Min	Nom.	Max	Unit
Vin(Full range)	180	230	264	Vac rms
Vin Frequency	47	50	63	Hz
Full Load	80%	100%	100%	Watts
Input current		5		Amp

1.2 Inrush current regulation

100A @ 230Vrms (at 25℃ ambient cold start).

2. DC OUTPUT

2.1 DC voltage regulation

Parameter	Range	Min	Nom.	Max	Unit
+5V	±5%	+4.75	+5	+5.25	Volts
+12V	±5%	+11.4	+12	+12.6	Volts

2.2 Load ranges

Parameter	Min	Nom.	Max	Peak	Unit
+5V	1.0	-	18		Amps
+12V	1.0	-	20		Amps

Note:

The maximum continuous average DC output power shall not exceed 320W.

2.3 Output Ripple

2.3.1 Ripple regulation

Parameter	Ripple & Noise	Unit
+5V	150	mV p-p
+12V	150	mV p-p

2.3.1 Definition

The ripple voltage of the output shall be measured at the pins of the output connector when terminated in the load impedance specified in figure 1.Ripple and noise are measured at the connectors with a 0.1uf ceramic capacitor and a 10uF electrolytic capacitor to simulate system loading . Ripple shall be measured under any condition of line voltage , output load ,line frequency ,operation temperature.

2.3.2 Ripple voltage test circuit

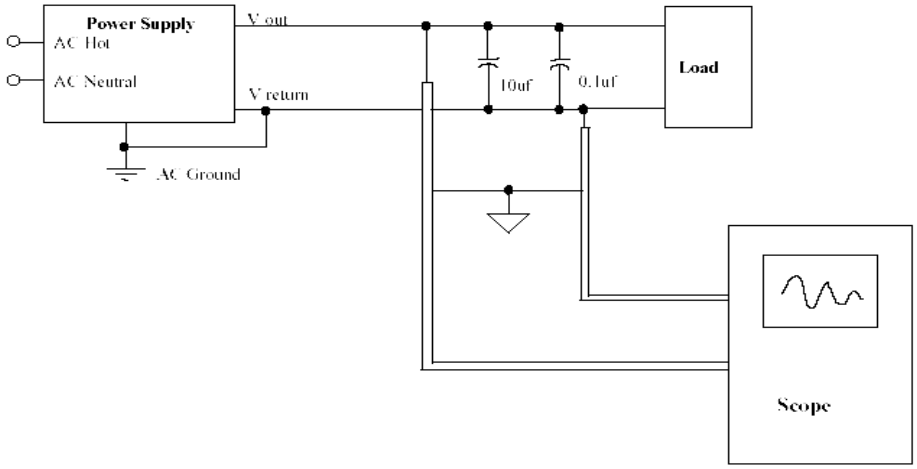

Figure 1.Ripple voltage test circuit

2.4 Efficiency

Power supply efficiency typical 65% at normal AC main voltage and full load on all outputs.

3. PROTECTION

3.1 Over-power protection

The power supply will be shutdown and latch off when output power over 140% of rated DC output.

3.2 Short circuit

The power supply shall shutdown and latch off for shorting +5V,+12V rails .The main output short circuit of any impedance shall less than 0.1 ohms. The maximum short circuit current in any output shall not exceed 240VA.

4. ENVIRONMENT

4.1 Operation

Temperature	0 to 50℃
Relative Humidity	10 to 90%,non-condensing

4.2 Shipping and Storage

Temperature	-20 to 70℃
Relative Humidity	5 to 95%,non-condensing

4.3 Altitude

Operating	10,000FT max
Storage	50,000FT max

5. SAFETY

UL* 60 950, 3rd Edition －CAN/CSA-C22.2-60950-00,
EN* 60 950, 3rd Edition
IEC*60 950, 3rd Edition (CB Report to include all national deviations)
EU* Low Voltage Directive (73/23/EEC) (CE Compliance)
The power supply must bear the German Bauart Mark from TUV or VDE

6. ELECTROMAGNETIC COMPATIBILITY(EMC)

FCC*,Class B, Part 15 (Radiated ＆ Conducted Emissions)
CISPR* 22 / EN55022, 3rd Edition (Radiated ＆ Conducted Emissions)
EN55024 (ITE Specific Immunity)
EN 61000-4-2 －Electrostatic Discharge
EN 61000-4-3 －Radiated RFI Immunity
EN 61000-4-4 －Electrical Fast Transients
EN 61000-4-5 －Electrical Surge
EN 61000-4-6 － RF Conducted
EN 61000-4-8 － Power Frequency Magnetic Fields
EN 61000-4-11 － Voltage Dips, Short Interrupts and Fluctuations
EN 61000-3-2 (Harmonics)
EN 61000-3-3 (Voltage Flicker)
EU EMC Directive (8/9/336/EEC) (CE Compliance)

7. MTBF

MTBF (mean time between failures)calculation

The demonstrated MTBF shall be 100,000 hours of continuous operation at 25℃,full load , 80%confidence limit and nominal line .The MTBF of the power supply be calculated in accordance with MIL-HDBK-217F.The DC FAN is not included.

8. MECHANICAL REQUIREMENTS

8.1 Physical dimension

Option for wire and connector, According to client’s demand changing the length of wire and the quantity of connector

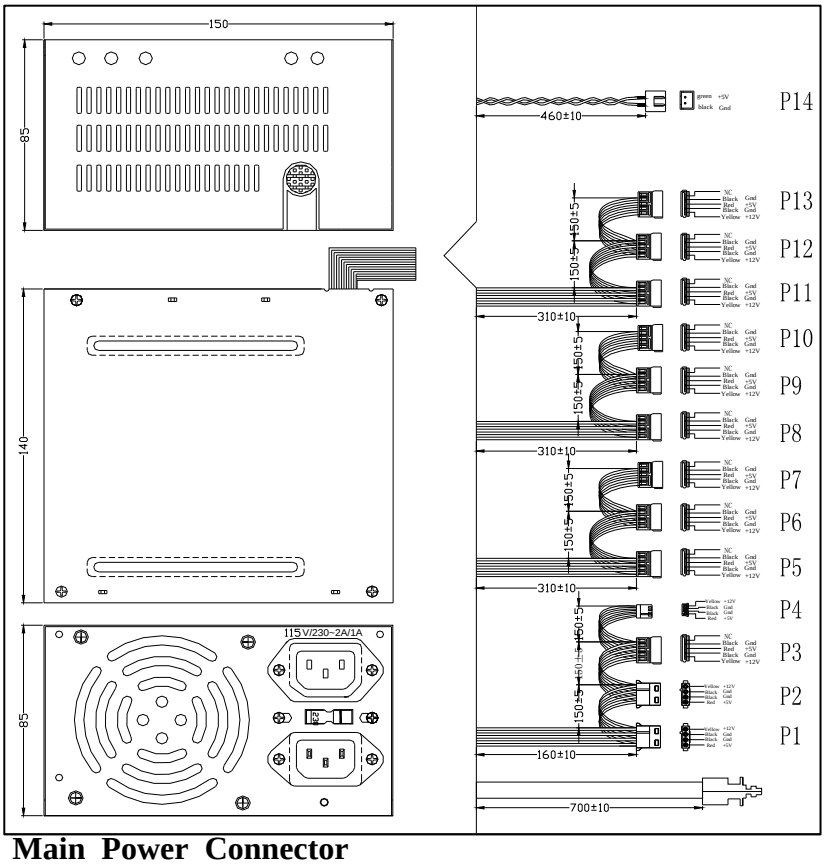

8.2 Main Power Connector

Peripheral Connector(s)

P1,P2,(AMP 1-480424-0 orMolex 8981-04P or equivalent)

Pin	Signal	18 AWG wire
1	+12VDC	Yellow
2	COM	Black
3	COM	Black
4	+5VDC	Red

Floppy Driver Connector

P4 (AMP 171822-4 or equivalent)

Pin	Signal	22 AWG wire
1	+12VDC	Yellow
2	COM	Black
3	COM	Black
4	+5VDC	Red

LED Connector

P14

Pin	Signal	26 AWG wire
1	COM	Black
2	+5V	Green

Serial ATA power Connector

P3,P5,P6,P7,P8,P9,P10,P11,P12,P13(MOLEX 88751 or equivalent)

Pin	Signal	18AWG wire
1	+3.3VDC	Orage
2	COM	Black
3	+5VDC	Red
4	COM	Black
5	+12VDC	Yellow

9. FAN SPEED CONTROL (Optional)

Fan voltage adjust with the ambient temperature or output power.